Nano-Z Series

Features

- *Ultra-low profile*
- *Closed loop control*
- *Easy sample holder exchange*
- *Compatible with many microscope stages*
- *picoQ® sensor technology*

Typical Applications

- *High speed confocal microscopy*
- *High throughput fluorescence microscopy*
- *Super resolution microscopy*

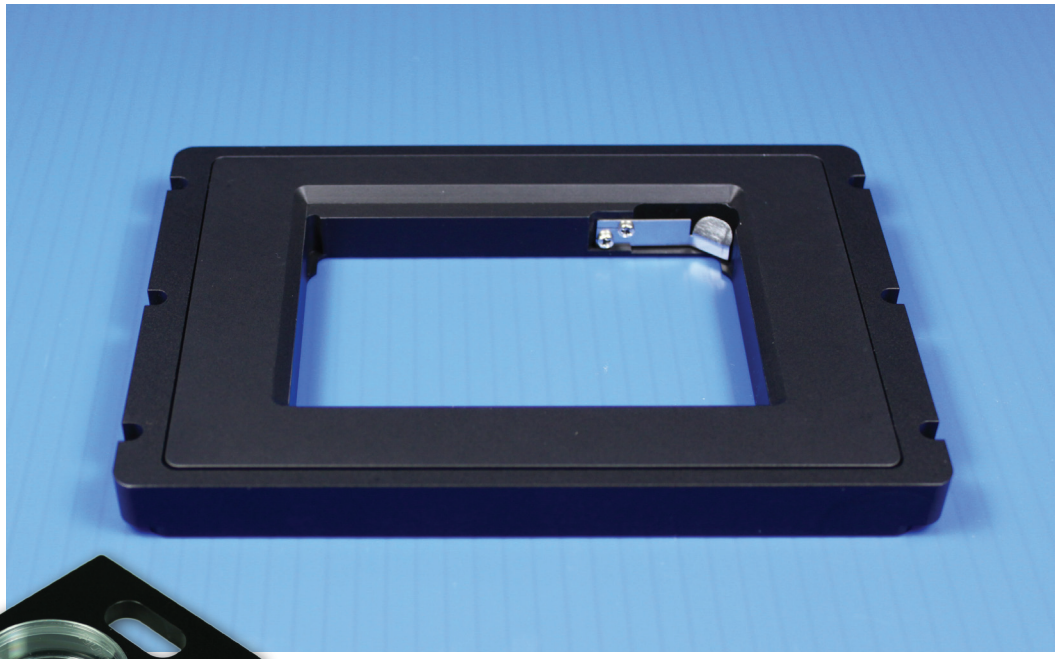

Compatible Software Packages

Image-Pro® AMS — *USB and analog motion control*

µManager — THE OPEN SOURCE MICROSCOPY SOFTWARE — *USB motion control*

LabVIEW — *Examples, tutorial, and Nano-Route® 3D supplied with Nano-Drive® USB interfaces.*

MetaMorph® — *USB and analog motion control*

SLIDEBOOK 5.0 — *Analog motion control, 1 or 2 axes.*

Product Description

The Nano-Z Series are high precision Z-axis nanopositioners specifically designed to hold slides, chambered slides, cover slips and 35mm petri dishes. The Nano-Z series nanopositioning systems are ideal for single cell fluorescence microscopy, super resolution microscopy and high resolution confocal imaging. The nanopositioning stages have true flexure guided motion and contains internal position sensing. Utilizing proprietary picoQ® technology, the position sensors provide absolute, repeatable position measurement for closed loop control with sub-nanometer resolution. The Nano-Z series offers smooth, continuous travel with superior resolution and stability for advanced microscopy techniques.

Technical Specifications

Range of motion (Z100) ..... 100 µm
Resonant Frequency ..... 380 Hz ± 20%
Range of motion (Z200) ..... 200 µm
Resonant Frequency ..... 250 Hz ± 20%
Resolution (100/200) 0.2/0.4nm
Recommended max. load (horizontal)* .....0.5 kg
Body Material ..... Aluminum
Controller ..... Nano-Drive®
75mm slide sample holder .....PN 158027
35mm Petri dish holder .....PN 158037

* Larger load requirements should be discussed with our engineering staff.

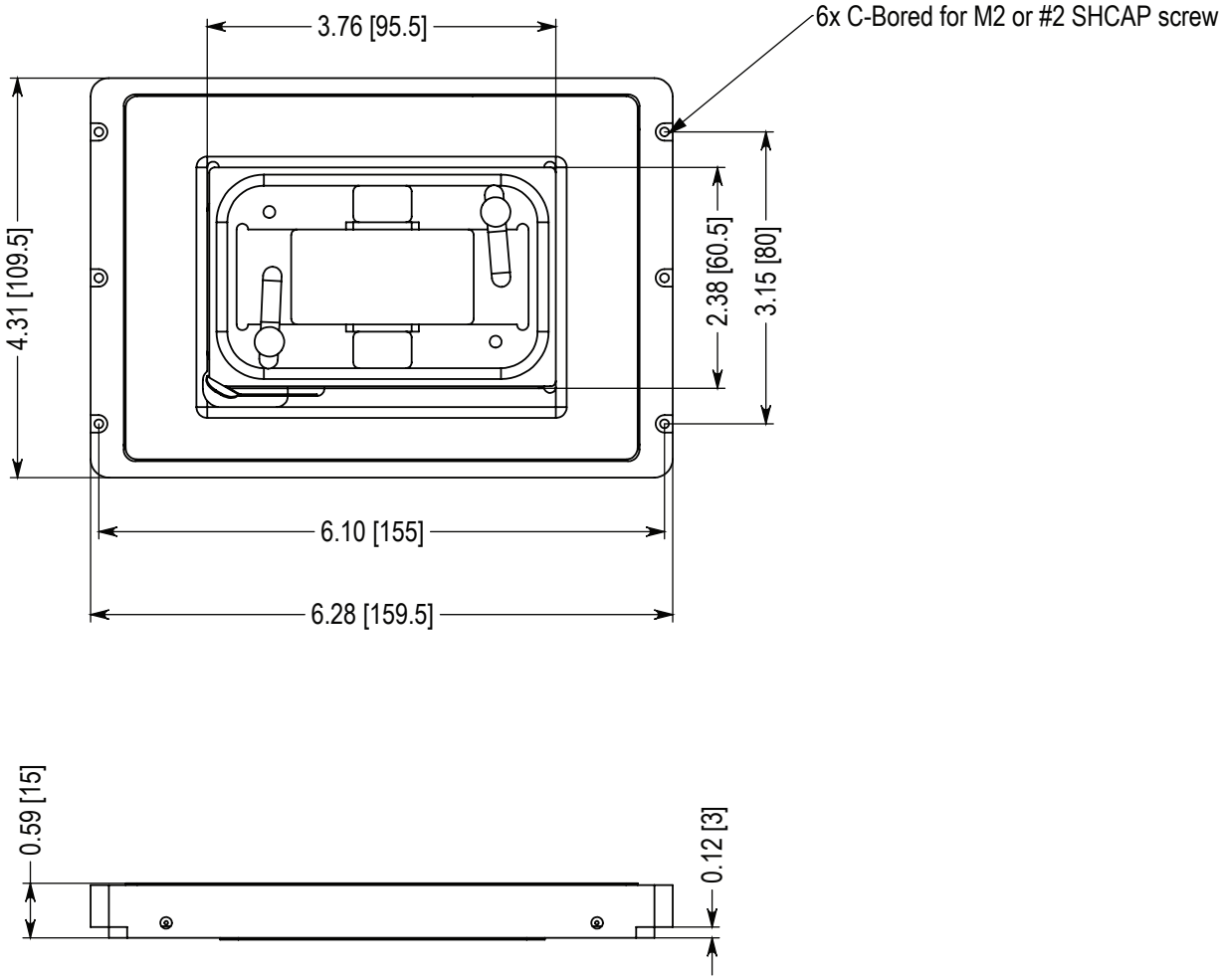

All Dimensions in Inches [mm]