海纳光学
电话：0755-84870203
网址：www.highlightoptics.com

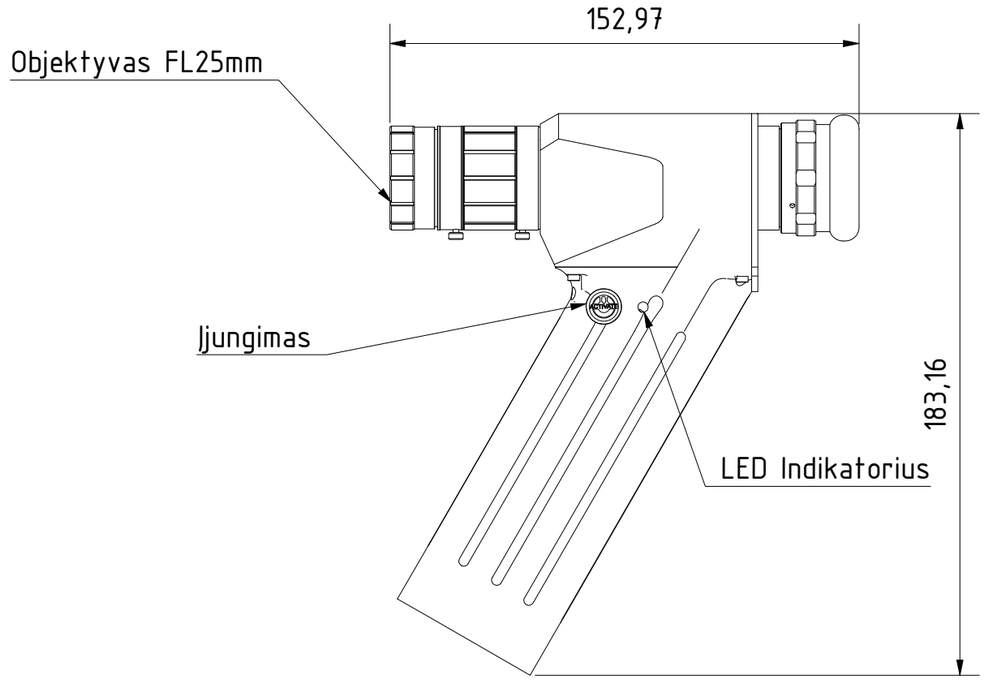

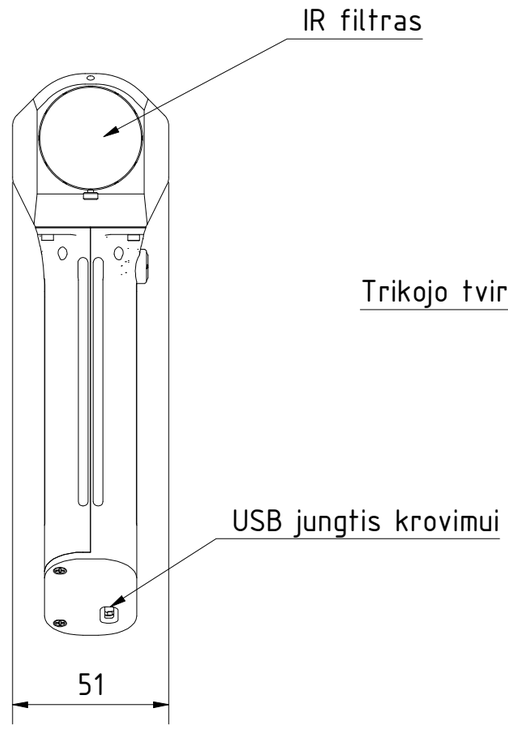

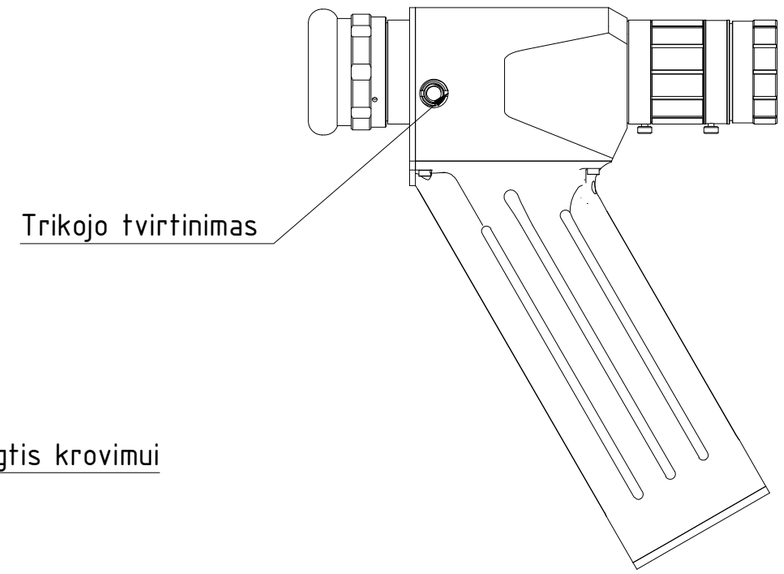

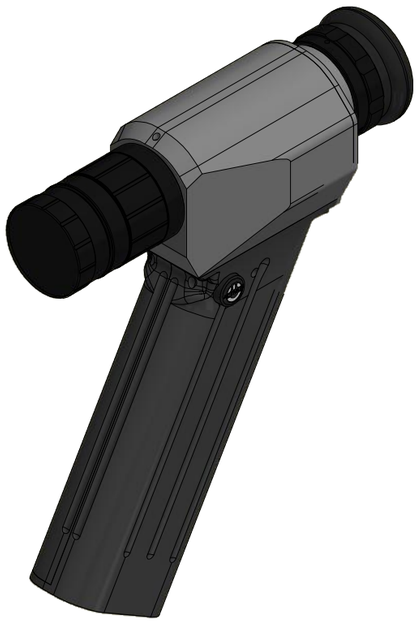

Specification	Value
Spectral sensitivity	(350-1300nm) (350-1700nm) (350-2000nm)
Resolution (center)	60 Lp/mm
Field of view	20° or 40°
Magnification	1X or 2X
Objective lens	25mm or 50mm
Adjustable iris	Yes
Minimal object distance	from 0.15mm
Distortion	20%
Battery life fully charged	50 hours
Weight	400g
Dimensions	153x184x51