5M SWIR InGaAs Camera

ID5MSWS-UCL

Technical Manual

iDule Corporation

Revision History

Edition	Data	Revision History
-00	2024/10/07	【Frist Edition】
-01		
-02		
-03		
-04		
-05		
-06		
-07		
-08		
-09		
-10		

目次

PAGE

1. Configuration 4
2.1. Standard Configuration 4
2.2. Free Software 4
2.3. Packaging Specifications 4
2. Handing Precautions 4
3. Specification 5
4.1.General Specification 5
4.2. Camera Input and Output Signal Standards 7
4.2.1 USB3.0 7
4.2.2 Camera Link 7
4.2.3 external input/output 7
4.3. **Spectral sensitivity characteristics and quantum efficiency characteristics** *(excluding lens characteristics and light source characteristics)*. 8
5. External Connection Connector Specifications 9
5.1. 12pin Connector HR10A-10R-12PB (HIROSE) (CN1) 9
5.2. Power input to camera 9
5.3. Power LED 10
5.4. Camera Link Connector 12226-1100-00PL(SUMITOMO 3M) (CN2, CN3) 10
5.5. translates to "USB 3.0 connection connector ZX360D-B-10P(ヒロセ 電機) (CN3) 11
5.6. Connector for CHU – CCU Cable Connection: 47272-0001 (Molex) (CN5 / CN6) 11
6. Timing Chart 12
6.1. Horizontal Synchronization Timing 12
6.2. Vertical Synchronization Timing 13
6.3. Camera Output Format 14
6.4. USB Video Class (UVC) Output Image Format 14
4. Manual Gain 15
8. Manual Shutter 16
9. Frame Rate 17
10. Partial Scan 18
13. UVC Extension Units (USB) Communication Function 22
14. Serial Communication Function 23
14.1. Command Specifications 24
14.2. Control Example 28
14.3. Temperature Reading 32
15. Function Settings (Serial Communication for Camera Function Configuration) 33
16. Dimensions (CHU) 36
17. Shipping Settings 39
18. Warranty Coverage 39
19. About CMOS Pixel Defects 39
20. Product Service 39

1.Product Overview

This model, ID5MSWS-UCL, is a USB 3.0 & Camera Link Base output camera equipped with a 5-megapixel SONY SWIR (Short-Wavelength InfraRed) CMOS sensor, measuring 11.371 mm diagonally.
The time required to read out all pixels in live mode with 2056 shutter lines (15.6 ms) and in Camera Link Full output mode is 31.9 ms (31.4 fps).

Features

- ☐ Global Shutter CMOS Sensor is Utilized
- ☐ Interface:USB3.0 & Camera Link
- ☐ In live mode, it is possible to set a shutter time longer than the effective number of lines. (Long exposure operation)
- ☐ Pixel size and frame rate of image output (Life mode、Camera Link Full Output)

Full scan Mode	: 2576(H) x 2056(V)	(When the number of shutter lines is ≦2056 lines.)	: 31.4 fps
2x2Binning(4-pixel sum averaging) mode	: 1248(H) x 1028(V)	(When the number of shutter lines is ≦1028 lines.)	: 36.4 fps

1. Configuration

2.1. Standard Configuration

- ☐ Camera Body

2.2. Free Software

- ☐ I Idule Control Panel Software (for evaluation and demo purposes)

※ Please contact our Sales Department for inquiries.

2.3. Packaging Specifications

- ☐ Individual Packing Carton

2. Handing Precautions

【Important】

To ensure proper use of the camera, please adhere to the following precautions.
Failure to comply with these precautions may result in malfunctions or defects, which will not be covered by the product warranty. This device must not be used in equipment where failure or malfunction could directly threaten human life or cause harm to the human body (such as equipment for specialized applications like nuclear power or aerospace).

・Do not connect this device's Display Port connector to any other equipment (such as monitors). Doing so may cause malfunctions not only in this device but also in the connected equipment.

・To protect the camera, please do not use it in dusty or humid environments.

・Please handle the camera with care to avoid strong impacts or static electricity, as this may lead to malfunctions.

To protect the CMOS imaging sensor, please avoid direct imaging of sunlight or high-intensity lights. Additionally, when the camera is not in use, please cover it with a protective seal.

Please connect to the camera according to "5. External Connection Connector Specifications." Incorrect connections can not only damage the camera itself but also cause irreparable harm to the connected equipment, so please exercise caution.

If there is an AC leak from the equipment connected to the camera (such as monitors or computers), it may damage the camera. Please ensure that the ground potential between the devices is properly verified and confirmed to be problem-free before making the connection.。

Please ensure that the camera's power supply voltage is used correctly within the specified range. Using a power supply that does not meet the specifications or is unstable may cause the camera to malfunction or break.。

・The ripple of the DC+12V±10% power input should be supplied within ±50mV. This may appear as noise in the image signal.

Please ensure that there is no chattering or noise when powering on the device.

3. Specification

4.1.General Specification

(1) Image Sensor	Device	Diagonal length 11.005mm Global Shutter type (SONY IMX992)	
	Effective pixel number	2576(H) x 2056(V)	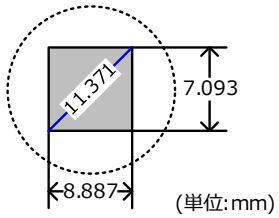
	Unit cell size	3.45μm(H) x 3.45μm(V)	
	CMOS sensor pixel CLK frequency	49.500MHz	
	Image Circle	Φ11.371mm	
	Sensor AD	12bit	
(2) Camera CLK Frequency	USB3.0 & Camera Link CLK frequency	49.5MHz	
(3) Effective Image Size	Full Scan Mode	: 2576(H) x 2056(V)	
	2x2 Binning Mode	: 1248(H) x 1028(V)	
(4) Frame Rate	Full Scan Mode	Camera Link Full	: 31.4 fps
		Camera Link Medium	: 15.7 fps
		Camera Link Base & USB3.0	: 7.8 fps
		(When the number of shutter lines is ≤ 2056 lines)	
	2x2 Binning Mode	Camera Link Full	: 36.4 fps
		Camera Link Medium	: 18.2 fps
		Camera Link Base & USB3.0	: 9.1 fps
		(When the number of shutter lines is≦1028lines.)	
(5) Image Output Timing	Full Scan Mode	Camera Link Full	: LVAL 322 CLK + 54(H ブランキング) CLK
		Camera Link Medium	: LVAL 644 CLK + 108(H ブランキング) CLK
		Camera Link Base & USB3.0	: LVAL 1288 CLK + 216(H ブランキング) CLK
			: FVAL 2056 ライン + 2140(V ブランキング) ライン
	2x2 Binning Mode	Camera Link Full	: LVAL 156 CLK + 496(H ブランキング) CLK
		Camera Link Medium	: LVAL 312 CLK + 992(H ブランキング) CLK
		Camera Link Base & USB3.0	: LVAL 624 CLK + 1984(H ブランキング) CLK
			: FVAL 1028 ライン + 1057(V ブランキング) ライン
(6) Camera Output bit	Camera Link Full	: 8bit	
	Camera Link Medium & Base & USB3.0	: 8bit, 10bit, 12bit interchangeable	
(7) Gain Variable Range	min: 0dB(x1.0) ~ max: +48dB(x256)		
(8) Shutter Sped Variable Range	Full scan Mode	Camera Link Full	: 22us ~ 498ms
		Camera Link Medium	: 30us ~ 996ms
		Camera Link Base & USB3.0	: 45us ~ 2.0s
	2x2Binning Mode	Camera Link Full	: 28us ~ 863ms
		Camera Link Medium	: 41us ~ 1.7s
		Camera Link Base & USB3.0	: 67us ~ 3.5s
(9) Tigger Shutter Mode	Live mode, fixed shutter trigger mode, and pulse width shutter trigger mode are selectable		
(10) Partial Scan	Partial Scan ON/OFF (Full Scan Mode): Configurable		
	Start Position	min: 0Line ~ max: 2048Lines(8line/step)	Partial Area: One location can be set.
	Effective Line Count	min: 8Line ~ max: 2056Lines(8line/step)	
		The 2x2 binning mode does not support partial scan mode.	
(11) 2x2Binning Mode	**2x2 Binning (4-pixel Addition Average) Mode**: ON/OFF setting is available.		
(12) Setup Adjustment	The camera outputs the sensor image as 12-bit data with an added offset value. +0digit ~ +511digit		
(13) Temperature Reading	Temperature inside the CMOS sensor (IMX992) and temperature inside the CHU housing.		

(14) Standard Sensitivity	Visible Light Range (Reference) : F5.6 2000lx (Condition: Camera Link Full, Shutter Line Count 2056 lines, Gain 0dB, Binning Mode OFF)	
(15) Power Supply Input Valtage	DC+12V±10% 12-pin connector / PoCL (not compatible with USB Bus Power supply).	
(16) Power Consumption	CHU(Head)	MAX 2.7W
	CCU(main unit)	MAX4.3W
	Total	MAX7.0W(12V 580mA)
		Caution: When using PoCL power supply in Base Configuration mode, the PoCL power standard exceeds the maximum of 4.0W. It is necessary to connect cables to the unused Full/Medium connector.
(17) Dimensions	CHU(Head)	W:50mm D:104mm H:28.5mm (excluding protrusions)
	CCU(main unit)	W:81mm D:117mm H:50mm (excluding protrusions)
(18) Weight	CHU(Head)	Approx 120g
	CCU(main unit)	Approx.168g
(19) CHU-CCU cable	DisplayPort cable(~ 5.0m)	
(20) Optical Axis Accuracy	Refer to the camera external dimension diagram	
(21) Safety/Quality Standards	RoHS : Confirm to RoHS	
(22) Durability	Vibration	20～200 Hz,98m/s2 (10G), X,Y and Z 3directions (120 min for each direction)
	Shock	No malfunction shall be occurred with 980m/s2 (100G) for ±X,±Y,and ±Z, 6 directions. (without package)
(23) Operating Environmental	Temperature -5 ～ +45°C Humidity 20 ～ 80%RH with no condensation.	
(24) Storage Environment	Temperature -25 ～ +60°C Humidity 20 ～ 80%RH with no condensation.	

4.2. Camera Input and Output Signal Standards

4.2.1 USB3.0

(1)Video Output data	Effective Video Output	2576(H) x 2056(V) : Full scan mode
		1248(H) x 1028(V) : 2x2 Binning mode
		USB Video Class (UVC)
(2) Serial Communication	USB3.0	Camera control is "USB control" when the USB cable is connected to the main unit, and "Camera Link control" when the USB cable is not connected. When the USB cable is connected, the Camera Link output automatically switches to "Camera Link Base Configuration.
(3) external trigger input	polarity	Switching between positive polarity/negative
	software trigger	Fixed shutter trigger mode The pulse width trigger mode is not supported because pulse width control cannot be performed via software.

4.2.2 Camera Link

(1)Video Output mode	Effective Video Output	2576(H) x 2056(V) : Full scan Mode
		1248(H) x 1028(V) : 2x2Binning Mode
(2)synchronization signal output	LVAL Camera Link output FVAL DVAL	Camera Link Output
(3) Serial Communication	SerTC	Camera Link input (Serial to Camera)
	SerTFG	Camera Link out put (Serial to Frame Grabber)
(4) external trigger input	polarity	Switching between positive polarity/negative
	CC1	Camera Link input(LVDS) External trigger signal input
		Minimum signal pulse width 2CLK

4.2.3 external input/output

(1) external trigger input	polarity	Switching between positive polarity/negative
	12pin Connector 11pin	5V TTL(Vih min:+1.04V, Vol max:+0.71V)
(2) FVAL output	12pin Connector 6pin	5V TTL(Voh min:+3.8V, Vol:+0.55V)
(3) Exposure output	12pin Connector 10pin	5V TTL(Voh min:+3.8V, Vol:+0.55V)

4.3. **Spectral sensitivity characteristics and quantum efficiency characteristics** *(excluding lens characteristics and light source characteristics)*.

Spectral Sensitivity Characteristics

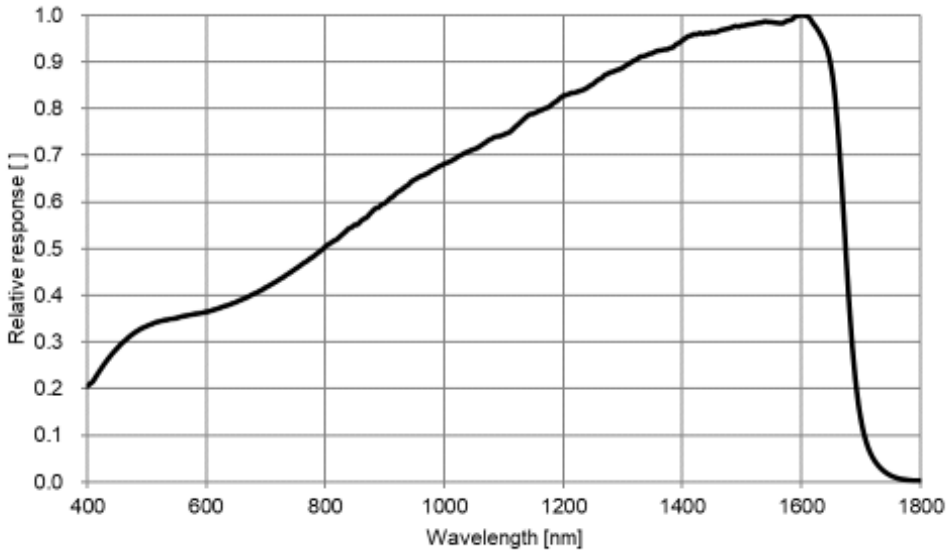

Quantum Efficiency

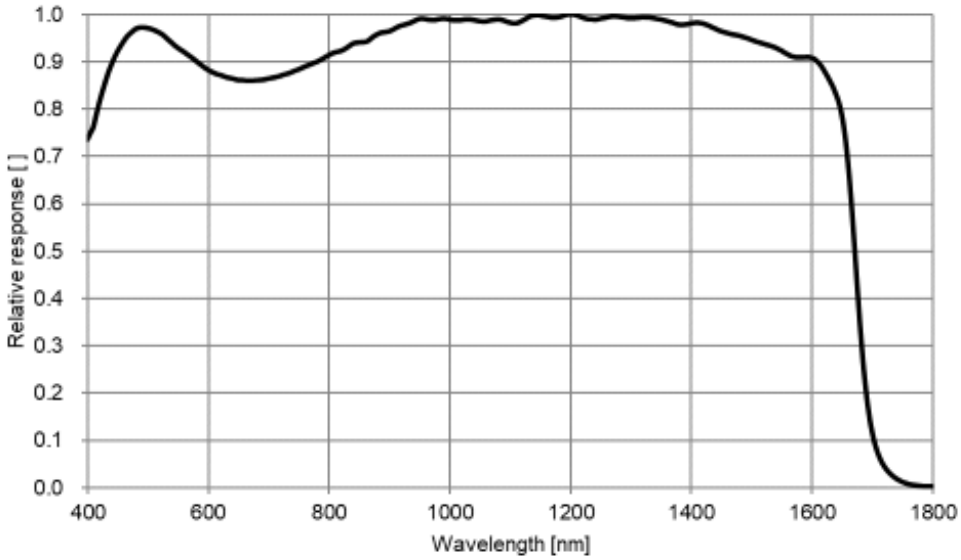

5. External Connection Connector Specifications

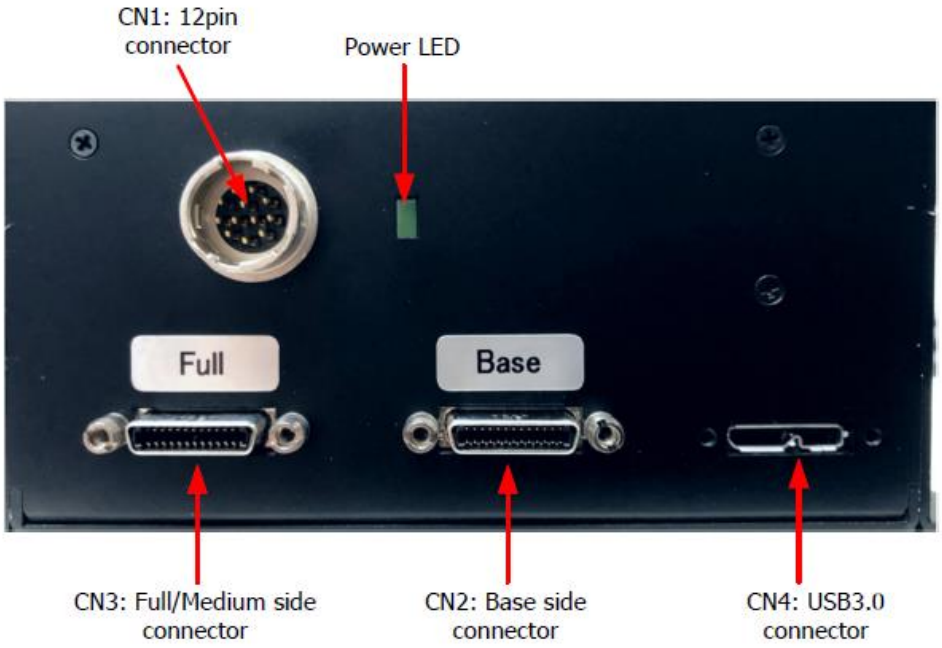

5.1. 12pin Connector HR10A-10R-12PB (HIROSE) (CN1)

PIN NO.	Name
1	GND
2	Power in(DC+12V)
3	GND
4	NC
5	GND
6	FVAL 出力
7	NC
8	GND
9	NC
10	Exposure out
11	Trigger in
12	GND

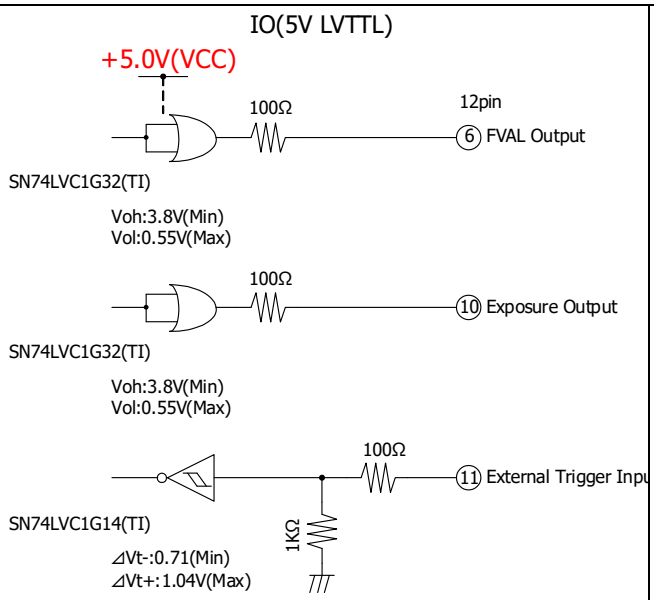

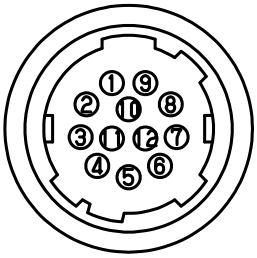

(CN1)

5.2. Power input to camera

■ The camera's rear 12-pin connector (2 pins) allows for power supply via Camera Link (PoCL). (Since the power supply is connected in a diode OR configuration, simultaneous power supply is not a problem.)

■ It does not support power supply via USB Bus Power.

5.3. Power LED

LED	Camera status
Off	: When the camera is not powered or if there is a malfunction.
Blinking	: When the CHU cable is not connected or if there is no proper LINK between the CHU and CCU.
On	: Normal operation

※ You can turn off the LED by configuring the serial settings (Address: 27d).

5.4. Camera Link Connector 12226-1100-00PL(SUMITOMO 3M) (CN2, CN3)

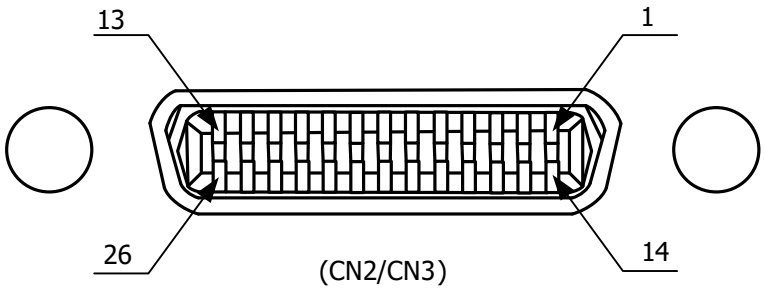

CN: 3 Full/Medium side

PIN No.	Name	PIN No.	Name
1	**+12V(PoCL)**	14	**GND**
2	Y0-	15	Y0+
3	Y1-	16	Y1+
4	Y2-	17	Y2+
5	Yclk-	18	Yclk+
6	Y3-	19	Y3+
7	100Ω	20	Terminated
8	Z0-	21	Z0+
9	Z1-	22	Z1+
10	Z2-	23	Z2+
11	Zclk-	24	Zclk+
12	Z3-	25	Z3+
13	**GND**	26	**+12V(PoCL)**

CN2: Base side

PIN No.	Name	PIN No.	Name
1	**+12V(PoCL)**	14	**GND**
2	X0-	15	X0+
3	X1-	16	X1+
4	X2-	17	X2+
5	Xclk-	18	Xclk+
6	X3-	19	X3+
7	SerTC+	20	SerTC-
8	SerTFG-	21	SerTFG+
9	CC1- (Trigger IN -)	22	CC1+ (Trigger IN +)
10	CC2+	23	CC2-
11	CC3-	24	CC3+
12	CC4+	25	CC4-
13	**GND**	26	**+12V(PoCL)**

5.5. translates to "USB 3.0 connection connector ZX360D-B-10P(ヒロセ 電機) (CN3)

■ The camera control operates as follows: when the USB cable is connected to the main unit, it is set to "USB control." If the USB cable is not connected, it switches to "Camera Link control" (automatic switching).
The Camera Link output during USB control functions in "Camera Link Base Configuration mode.
The presence or absence of the USB cable is detected via the VBUS power (+5.0V input)

■ It does not support USB 2.0 interface。

■ It does not support USB Bus Power supply。

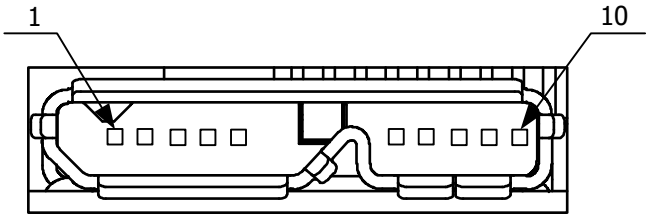

(CN4)

Pin No.	Name
1	Vbus
2	D-
3	D+
4	ID(Unused)
5	GND
6	SSRX-
7	SSRX+
8	GND_DRAIN
9	SSTX-
10	SSTX+

5.6. Connector for CHU – CCU Cable Connection: 47272-0001 (Molex) (CN5 / CN6)

■ Connect CHU (CN6) and CCU (CN5) using a Display Port cable (max: 5m).

■ Please power on the CCU after connecting the Display Port cable. If you connect the cable after powering on the CCU, please turn the CCU power off and then on again.

■ Hot-swapping is not supported.

CN5: DisplayPort Connector(CCU)

CN6: DisplayPort Connector(CHU)

[Attention] Do not connect this device's Display Port connector to any other equipment (such as monitors). Doing so may cause malfunctions not only in this device but also in the connected equipment.

6. Timing Chart

6.1. Horizontal Synchronization Timing

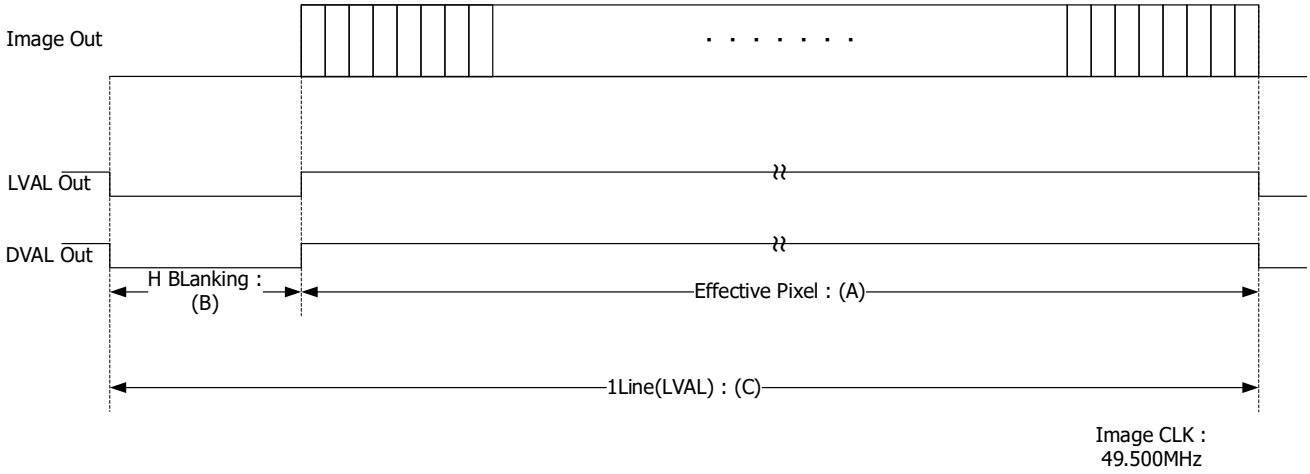

(1) Full Scan Mode(Condition: When the shutter line count is ≤ 2056 lines)

	Effective Pixel CLK Count (A) (CLK)	H Blanking CLK Count (B) (CLK)	1 Line CLK Count (C) (CLK)	1 Line Time (us) (us)
CL Full	322	54	376	7.596
CL Medium	644	108	752	15.192
CL Base & USB3.0	1288	216	1504	30.384

(1) 2x2 Binning mode(4 Pixel Accumulation Average) Mode (Condition: When the shutter line count is ≤ 1028 lines)

	Effective Pixel CLK Count (A) (CLK)	H Blanking CLK Count (B) (CLK)	1 Line CLK Count (C) (CLK)	1 Line Time (us) (us)
CL Full	156	496	652	13.172
CL Medium	312	992	1304	26.343
CL Base & USB3.0	624	1984	2608	52.687

6.2. Vertical Synchronization Timing

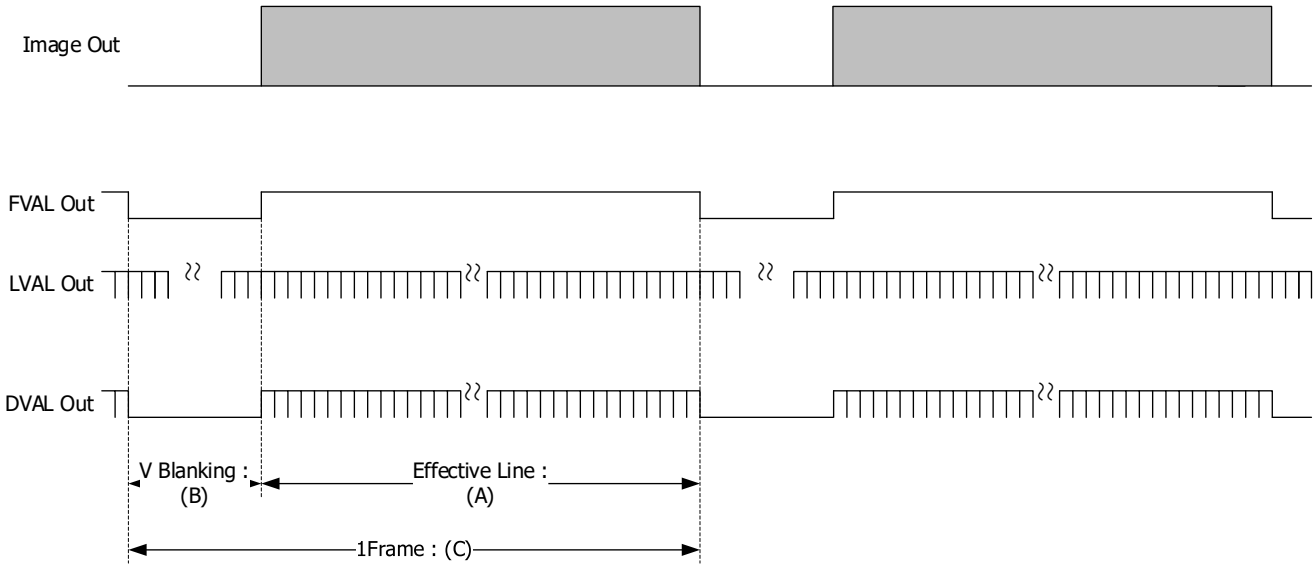

(1) Full Scan Mode (Condition: When the shutter line count is ≤ 2056 lines)

	Effective Line Count (A) (Line)	V Blanking Line Count (B) (Line)	Total Line Count per Frame (C) (Line)	Frame Time (ms)
CL Full	2056	2140	4196	31.9
CL Medium				63.7
CL Base & USB3.0				127.5

(2) 2x2Binning mode(4 Pixel Accumulation Average) Mode (Condition: When the shutter line count is ≤ 1028 lines)

	Effective Line Count (A) (Line)	V Blanking Line Count (B) (Line)	Total Line Count per Frame (C) (Line)	Frame Time (ms)
CL Full	1028	1057	2085	27.5
CL Medium				54.9
CL Base & USB3.0				109.9

6.3. Camera Output Format

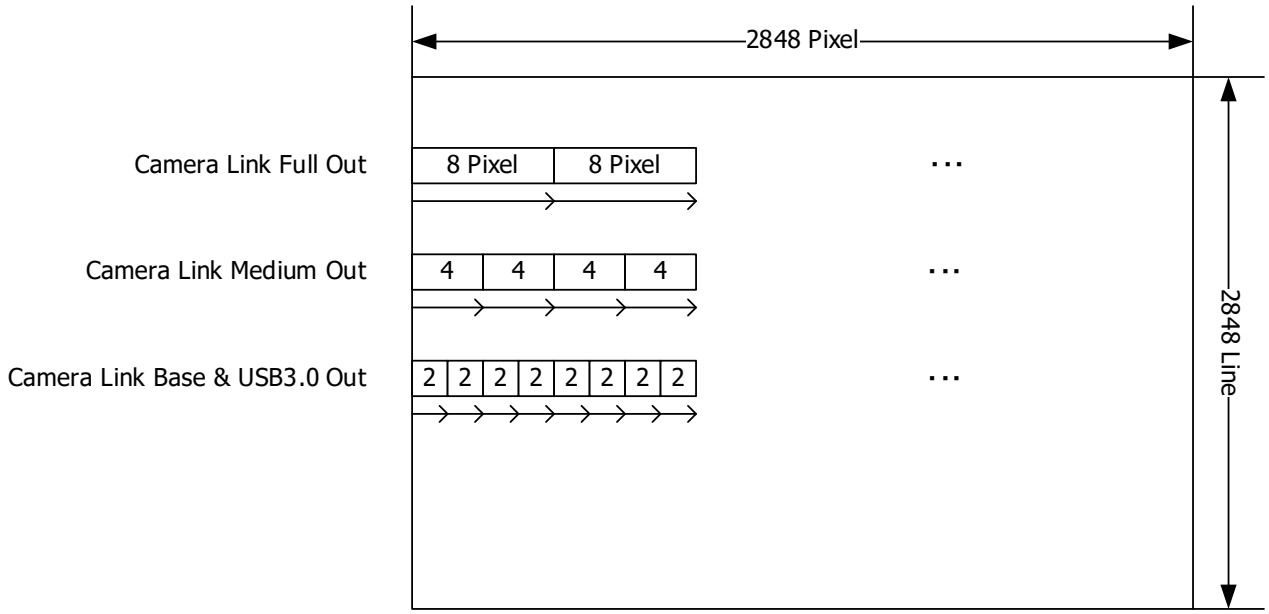

6.4. USB Video Class (UVC) Output Image Format

The image data is treated as 16 bits and is padded. Unused data is fixed at a value of '0'

	b15 (MSB)	···	b8	b7	b6	b5	b4	b3	b2	b1	b0 (LSB)
8bit output	Image data			0(fixed)							
10bit output	Image data					0(fixed)					
12bit output	Image data							0(fixed)			

4. Manual Gain

You can set the manual gain to a maximum of 48 dB, which is the sum of the analog gain and digital gain. The gain is configured by setting the register to a value that is ten times the desired gain (in dB), with a step of 0.1 dB.

For example setting: For setting a gain of 6 dB:
6 × 10 = 60d ・・・ Address: 32+33d, Data: 60d(hexadecimal 003Ch)

Function	Function		Function	
	(Dec)	(Hex)		
Manual Gain	32+33	20+21	LLHH:	min: 0d(0000h) ~ max: 480d(01E0h) 0dB(x1.0) ~ 48dB(x256)
				0d(0000h) : 0dB(x1.0) 60d(003Ch) : 6dB(x2.0) 480d(01E0h) : 48dB(x256)

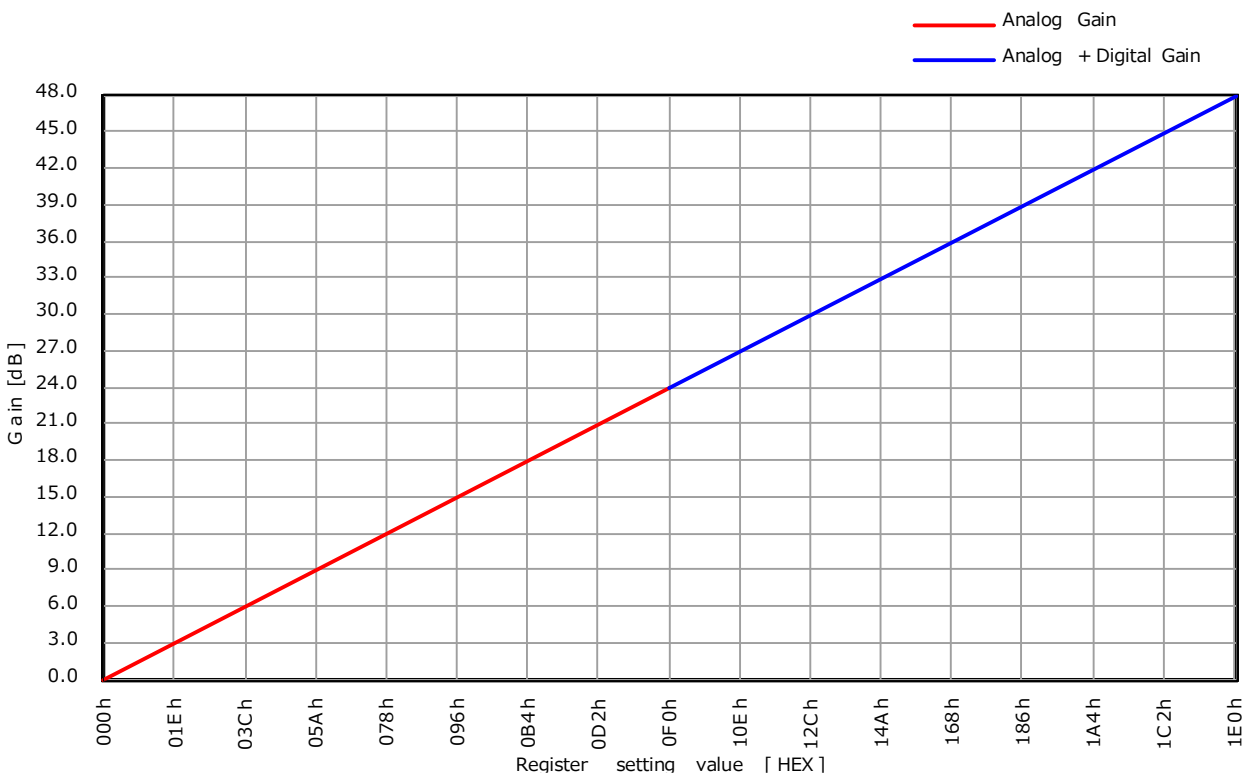

※ 別紙「DOC-0196-00_ID5MSWS-UCL_Manual Gain_Shutter_spreadsheet.xlsx」を参照ください。

8. Manual Shutter

Shutter time is set based on the number of lines (Address: 38+39d).。

- **If the shutter line setting value (Address: 38+39d) ≤ 1:**
  - Shutter line count = 1
- **If the shutter line setting value (Address: 38+39d) > 1:**
  - Shutter line setting value = Shutter line count

Example Settings:

(1) When the shutter line setting value (Address: 38+39d) is set to 1:
Shutter line count = 1 line

(2) When the shutter line setting value (Address: 38+39d) is set to 2056:
Shutter line count = 2056 lines

Shutter time = Shutter line count x Time per line + Shutter offset value (14.802us)

	Time per line (us)	
	Full Scan Mode	Full Scan Mode
Camera Link Full	7.596	13.172
Camera Link Medium	15.192	26.343
Camera Link Base & USB3.0	30.384	52.687

Example Settings:

(1) When using Camera Link Full in full scan mode and the shutter line setting value (Address: 38+39d) is set to 2056:
Shutter line count = 2056 lines
Shutter time = 2056 lines × 7.596 μs + 14.802 μs = 15.6 ms

(2) When using Camera Link Full in 2x2 binning mode and the shutter line setting value (Address: 38+39d) is set to 1028:
Shutter line count = 1028 lines
Shutter time = 1028 lines × 13.172 μs + 14.802 μs = 13.6 ms
※ 別紙「DOC-0196-00_ID5MSWS-UCL_Manual Gain_Shutter_spreadsheet.xlsx」を参照ください。

9. Frame Rate

When the shutter line count exceeds the effective line count, the frame rate decreases by the number of additional lines.。

■ When the shutter line count ≤ effective line count:
Lines per frame = effective line count + effective line count + V blanking line count
Time per frame = lines per frame × time per line
Frame rate = 1 / time per frame

■ When the shutter line count > effective line count:
Lines per frame = shutter line count + effective line count + V blanking line count
Time per frame = lines per frame × time per line
Frame rate = 1 / time per frame

■ The effective line count is:
In full scan mode: fixed value of 2056 lines.
In 2x2 binning mode: fixed value of 1028 lines.
In partial scan mode: partial scan effective line count (Address: 80+81d).

■ The V blanking line count is:
In full scan mode: fixed value of 84 lines.
In 2x2 binning mode: fixed value of 29 lines.

	1Time per line (us)	
	Full scan mode	2x2Binning mode
Camera Link Full	7.596	13.172
Camera Link Medium	15.192	26.343
Camera Link Base & USB3.0	30.384	52.687

Example Settings:
(1) Camera Link Full, full scan mode, when the shutter line setting value (Address: 38+39d) is set to 2056:
Shutter line count = 2056 lines
Shutter time = 2056 lines × 7.596 μs + 14.802 μs = 15.6 ms
Since the shutter line count ≤ effective line count (2056 ≤ 2056):
Lines per frame = 2056 lines + 2056 lines + 84 V blanking lines = 4196 lines
Time per frame = 4196 lines × 7.596 μs = 31.9 ms
Frame rate = 1 / 31.9 ms = 31.3 fps

(2) Camera Link Full, full scan mode, when the shutter line setting value (Address: 38+39d) is set to 4112:
Shutter line count = 4112 lines
Shutter time = 4112 lines × 7.596 μs + 14.802 μs = 31.2 ms
Since the shutter line count > effective line count (4112 > 2056):
Lines per frame = 4112 lines + 2056 lines + 84 V blanking lines = 6252 lines
Time per frame = 6252 lines × 7.596 μs = 47.5 ms
Frame rate = 1 / 47.5 ms = 21.1 fps

※ 別紙「DOC-0196-00_ID5MSWS-UCL_Manual Gain_Shutter_spreadsheet.xlsx」を参照ください。

10. Partial Scan

The partial area can be set in one location and is configured using the partial scan start position (address: 64+65d) and the number of valid lines for partial scan (address: 80+81d).

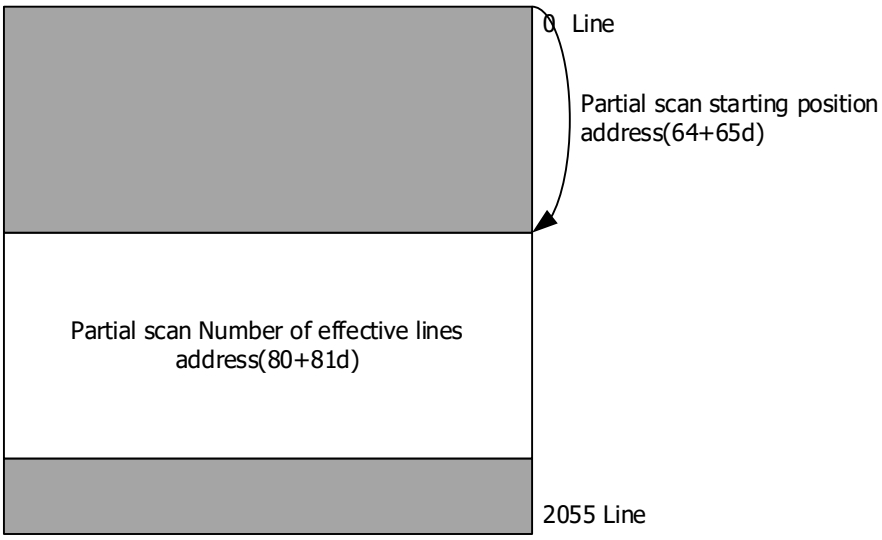

Functionality	Address:		Data	
	(Dec)	(Hex)		
Partial Scan Mode	08	08	00:	Full Scan Mode
			01:	Partial Scan Mode Setting
Partial Scan Start Position	64+65	40+41	LLHH:	min: 0d(0000h) ~ max: 2048d(0800h) 8Line/Step
				※ To enable partial scan mode, set 01d at address 08d.
Number of Valid Lines for Partial Scan	80+81	50+51	LLHH:	min: 8(0008h) ~ max: 2056(0808h) 8Line/Step
				※ To enable partial scan mode, set 01d at address 08d.

■In 2x2 binning mode, the partial scan function is not available. When partial scan is set to ON, the camera operates in full scan mode at 1248(H) x 1028(V).

■ The condition must be met that the Partial Scan Start Position (Address: 64+65d) + Partial Active Line Count (Address: 80+81d) ≧ 2056.

■ Frame Line Count and Frame Rate when Partial Scan is set: Please refer to the page "9. Frame Rate" for details.

Example: Relationship between the set line count and frame rate.

Partial Scan Effective Line Count (Address: 80+81d)	Shutter Line Setting Value (Address: 38+39d)	Frame Line Count	Frame Rate(fps)		
			Full	Medium	Base & USB3.0
8(min)	8	100	1316.5	658.2	329.1
16	16	116	1134.9	567.4	283.7
32	32	148	889.5	444.8	222.4
64	64	212	621.0	310.5	155.2
128	128	340	387.2	193.6	96.8
256	256	596	220.9	110.4	55.2
512	512	1108	118.8	59.4	29.7
1024	1024	2132	61.7	30.9	15.4
2056(max)	2056	4196	31.4	15.7	7.8

※ 別紙「DOC-0196-00_ID5MSWS-UCL_Manual Gain_Shutter_spreadsheet.xlsx」を参照ください。

11. Fixed Shutter Trigger Mode

■ This mode starts exposure from the rising edge of an external trigger signal and exposes for the number of lines set in the register.

■ Trigger pulses shorter than one line will be treated as one line width.

■ Any trigger inputs during the exposure period (Exposure Time) or sensor output period will be ignored by the camera (as shown in diagrams (A) and (B)). (Overlap operation is not possible)

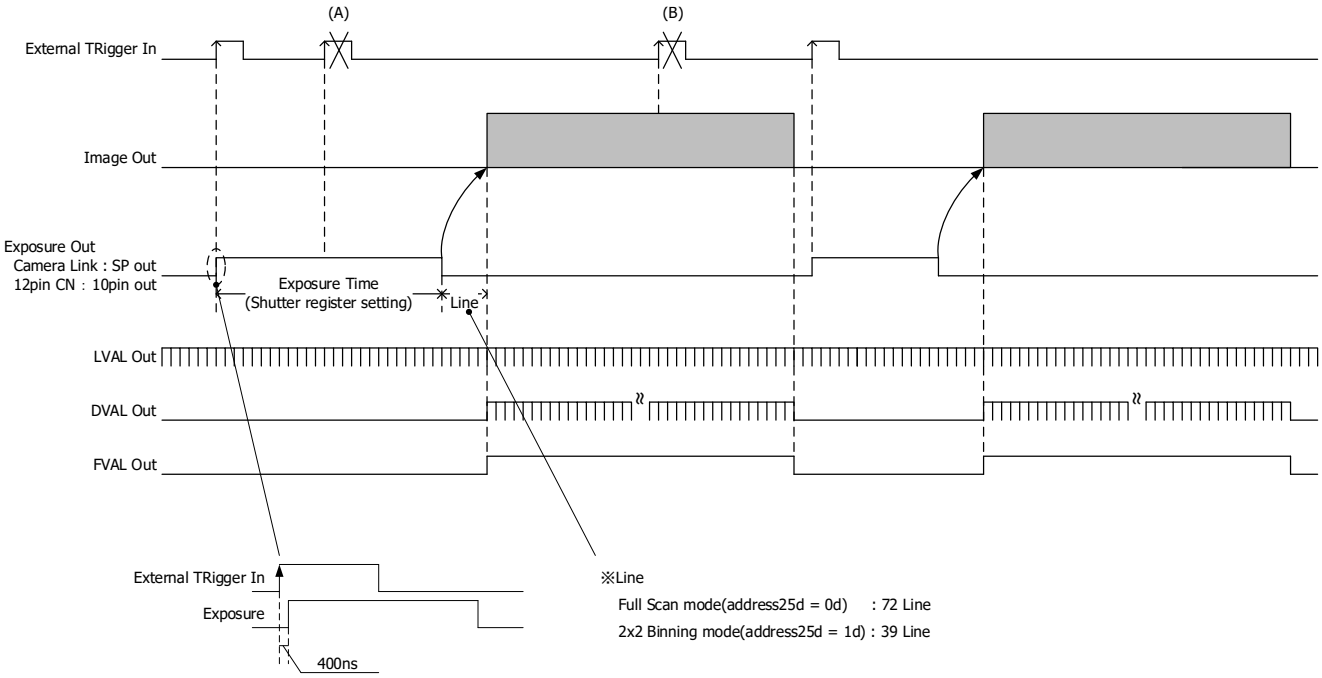

12. Pulse Width Shutter Trigger Mode

■ This is a mode in which exposure occurs during the time between the rising edge and the falling edge of an externally input trigger signal.

■ A trigger pulse shorter than one line will be processed as one line width.

■ Any trigger input during the sensor output period will be ignored by the camera (as shown in the diagram below (B)). (Overlap operation is not possible.)

■ There is no upper limit for the pulse width of the external trigger signal, but in the case of long exposure times, noise such as dark noise and shading may become noticeable in the output image.

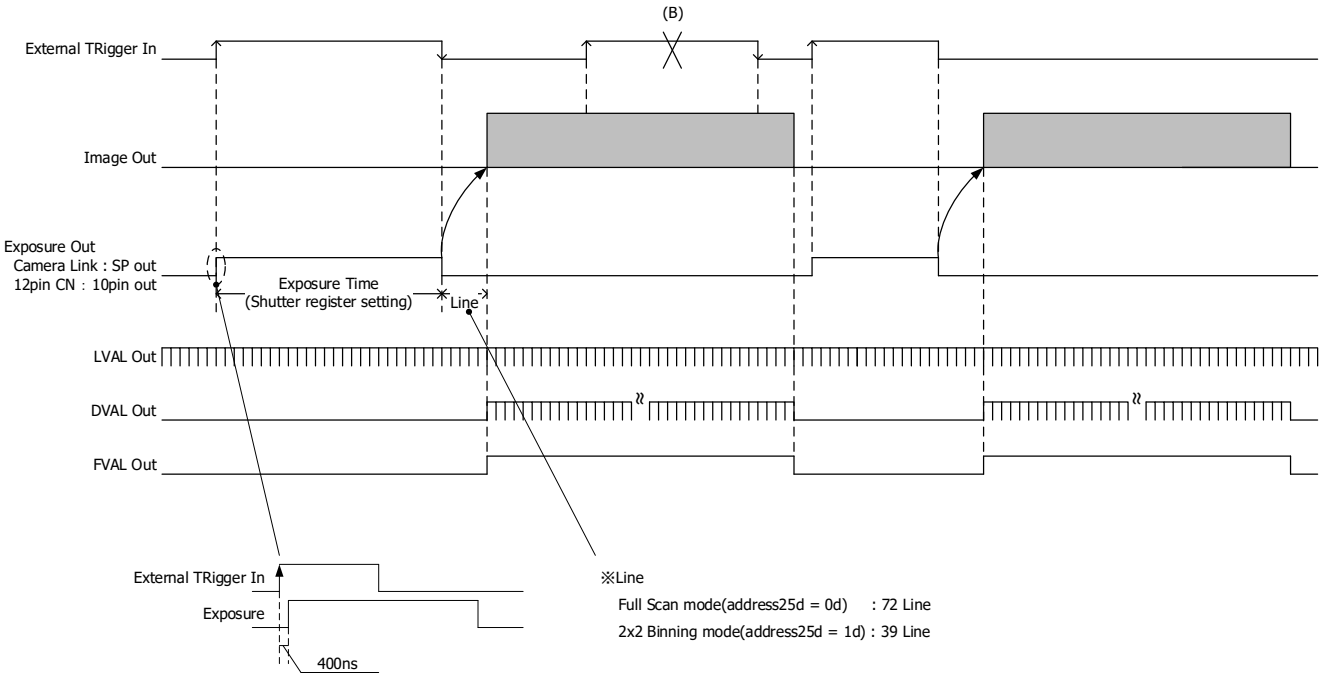

13. UVC Extension Units (USB) Communication Function

Function settings are performed using the SetVal() and GetVal() functions within the Software Development Kit.

* C language description example

```
#include "UsbCamLib3.h"
UsbCamLib3 mCamLib;

void example()
{
        int ans;
        int data;

        // Init() : Library initialization, camera detection process
        // In the actual processing, please handle error branching based on the return value
        ans = mCamLib.Init();


        // GetVal() : Register data retrieval
        // Obtain data from address 1 of camera 0 (shutter mode setting value)
        data = mCamLib.GetVal(0,1);


        // SetVal() : Register data set
        //Send 1 to address 4 of camera 0 (change to trigger mode)
        //Send 3 to address 6 of camera 0 (change to software trigger)
        mCamLib.SetVal(0, 4, 1);
        mCamLib.SetVal(0, 6, 3);


        // SoftTrigger() : Software trigger
        // Send software trigger to camera 0
        mCamLib.SoftTrigger(0);


        // Close() : Library shutdown process
        mCamLib.Close();
```

14. Serial Communication Function

Communication Settings	
Baud Rate	:115200bps(Fixed)
Data	:8bit
Stop Bit	:1bit
Parity	:None
XON / XOFF	:No control

・ Transmission Command Format (Host → Camera)

The command and parameters are sent with STX and ETX added.

STX (02h)	Command (2Bytes)	Parameter(ASCII Code) (20h ~ 7Fh)	ETX (03h)

・ Response Format (Camera → Host)

The camera responds with control codes **ACK** and **NAK**.

If the response includes a text message, a message with **STX** and **ETX** added will be sent.

ACK (06h)

・・・ Succeed

NAK (15h)

・・・ Fail

STX (02h)	Command (2Bytes)	Parameter(ASCII Code) (2Fh ~ 7Fh)	ETX (03h)

・・・ Message Response

・ Command List

Command	Function
SR	Register Write
GR	Register Read
SU	User Data Write
GU	User Data Read
CS	Configuration Save
CR	Configuration Restore
QM	Model Name Acquisition
QS	Serial Number Acquisition
QV	Firmware Version Acquisition
QE	Error Details Acquisition
QT	Temperature Read

14.1. Command Specifications

1) Set some values of resister

【Command】 Set : Resister

STX	S	R	(a)	(a)	(d)	(d)	···	ETX
			Address		Data(Variable-length：max 16 address)			

【Return Value】

Succeed ··· ACK

Fail ··· NAK

【Description】

This rewrites the register value at the specified address.

The data is of variable length, and you can set up to 16 addresses of data, starting with the specified address.

2) Get some value of resister

【Command】 Get : Resister

STX	G	R	(a)	(a)	(d)	ETX
			Address:		Number of data acquisition（optional）	

【応答】

Succeed ···

STX	A	R	(d)	(d)	···	ETX
			Data（Data length depends on the number of acquisitions）			

Fail ··· NAK

【Remarks】

The command gets some value of register of the specified address. The number of the acquisition is between '0' and 'F'（ Hexadecimal ）.

If appoint '0' at the address, the command send data of 16 address. If the command is omitted at the address, the command send an address.

3) Set User's data

【Command】Set ： User's data

STX	S	U	(n)			···	ETX

Table No. (0~3)

User's data (fixed length :16byte)

【Return Value】

Succeed	···	ACK
Fail	···	NAK

【Remarks】

The commands, sets free data on the specified register, and can use 4 tables (1 table : 16 characters).

4) Get User's data

【Command】Get ： User's data

STX	G	U	0	ETX

Table No. (0~3)

【Response】

succeed	···	STX	A	U	(d)	(d)	···	ETX

User's data (fixed length : 16byte)

Fail	···	NAK

5) Save all Configurations

【Command】Configuration: Save

STX	C	S	ETX

【Return Value】

Succeed ··· ACK

Fail ··· NAK

6) Restore all configurations

【Command】Configuration : Restore

STX	C	R	ETX

【Return Value】

Succ ··· ACK

Fail ··· NAK

7) Get a modelname

【Command】Query : Model name

STX	Q	M	ETX

【Return Value】

Succeed ···

STX	R	M	(d)	(d)	···	ETX

Model name (Fixed length：16byte)

Fail ··· NAK

8) Get a serial number

【Command】Query : Serial number

STX	Q	S	ETX

【Return value】

Succeed ···

STX	R	S	(d)	(d)	···	ETX

Serial Number(Fixed length：8byte)

Fail ··· NAK

9) Get a firmware version

【Command】Query ： Version

STX	Q	V	ETX

【Return Value】

Succeed ･･･

STX	R	V	(d)	(d)	･･･	ETX

Version information (fixed length：8byte)

Fail ･･･

NAK

10) Get a detail of error information

【Command】 Query :Error

STX	Q	E	ETX

【Return Value】

Succeed ･･･

STX	R	E	(d)	(d)	(d)	ETX

Kind Detal

Fail ･･･

NAK

Kind		Detail	
0:	No Error	0:	Normal result
1:	Communication Protocol Error	1:	The command is undefined
		01:	The command length is more than defined
		02:	The address is undefined.
		03:	The value of data is undefined
		04:	The length is more than defined
		05:	The table number is undefined
		06:	The string of user data was abnormal
2:	Internal Control Error	2:	Internal control is abnormal
		01:	A read only address was written by the command
		02:	A protected address was written by the command
		03:	Out of range address was written by the command
		04:	The selected table number is abnormal
		05:	The value of the man acquisition area is abnormal
		06:	A function is not implemented

14.2. Control Example

1) How to check trigger shutter mode. (The command gets a value from address 04)

【Send Command】

STX	G	R	0	4	ETX

Address: 04h

【Return value from camera】

STX	A	R	0	1	ETX

Data01h

【Receive Return Value】

The camera is working with a trigger shutter mode, because the command received a 01 from the camera.

2) The translation of your sentence would be:

Check the information of the partial scan start position. (Read 2 bytes from address: 64+65d (40+41h))

【Send Command】

STX	G		R	4	0	2	ETX

Address: 40h 2Byte

【Return value from camera】

STX	A	R	1	0	0	0	ETX

Data0100h

【Receive return value】

16d(0010h)

The data read in 2 bytes will be output in the order of Low Byte Data and High Byte Data.

3) To turn off the rear LED of the camera。
(write data: 0d(00h) to address: 27d(1Bh).)

【Send Command】

STX	S	R	1	B	0	0	ETX

Address: 1Bh　　Data00h

【Return value form camera】

ACK

【Receive Return value】
The command finished normally, because the command received ACK from the camera.

4) To set the partial scan start position to 16 lines。
(write data: 16d(0010h) to address: 64+65d(40+41h))

Please ensure that the data set for 2 bytes is arranged in the order of Low Byte Data followed by High Byte Data.

【Send Command】

STX	S	R	4	0	1	0	0	0	ETX

Address: 40h　　Data1000h

【Return value form camera】

ACK

【Receive return value】
The command finished normally, because the command received ACK from the camera.

5) How to save configurations of a camera. (The command send CS)

【Send Command】

STX	C	S	ETX

【Return value form camera】】

ACK

【receive Return Value】

The command finished normally, because the command received ACK from the camera.

6) How to restore the camera to initial settings. (The command send CR)

【Send Command】

STX	C	R	ETX

【Return value form camera】】

ACK

【receive Return Value】

The command finished normally, because the command received ACK from the c

7) How to get detail of a communication error.

【Send Command】

STX	G	R	@	0	ETX

Set the address invalid value

【Return value from camera】

NAK

【Receive return value】

The command finished abnormally, because the command received 'NAK' from the camera. When the command did not finish normally, retry to send command or send to get detail of a detail error command.

【Send Command】

STX	Q	E	ETX

【Return Value from camera】

STX	R	E	1	0	2	ETX

kind1 Detail 02h

【Receive Return Value】

Type 1, Detail 02h has been responded, so the address: Value abnormal error.

14.3. Temperature Reading

It is possible to read the internal temperature of the CMOS sensor (IMX992) as well as the temperature inside the CHU housing.

【Command】Temperature Reading

STX	Q	T	(d)	(d)	ETX

(d) → 0: Celsius (℃) (integer and two decimal places)
1: RAW

(d) → 0: CMOS sensor (IMX992) internal temperature
1: CHU housing internal temperature

【Response】

Succeed ···

STX	R	T	(t)	(t)	(t)	(t)	ETX

Temperature Data (Fixed Length: 4 Bytes)

Fail ···

NAK

When converting RAW data to Celsius (°C):

■ CMOS sensor (IMX992) internal temperature:

Tmp[℃] 12-bit = RAW[11] x (-256) + RAW[10:3] + RAW[2] x 0.5 + RAW[1] x 0.25 + RAW[0] x 0.125 (-30℃ to +110℃)

■ CHU housing internal temperature:

Tmp[℃] 13-bit (MSB = sign) = RAW x 0.0625 (-55℃ to +150℃)

Example Settings:

CMOS sensor internal temperature reading: Celsius (℃)
<STX>QT00<ETX> → <STX>RT2132<ETX>
21h: 33d (integer), 32h: 50d (two decimal places)
Result: 33.50℃

CMOS sensor internal temperature reading: RAW
<STX>QT01<ETX> → <STX>RT010C<ETX>
EFh (= 0001_0000_1100b): 268d
Result: 33 + 1 x 0.5 = 33.5℃

CHU housing internal temperature reading: Celsius (℃)
<STX>QT00<ETX> → <STX>RT2406<ETX>
24h: 36d (integer), 06h: 06d (two decimal places)
Result: 36.06℃

CHU housing internal temperature reading: RAW
<STX>QT01<ETX> → <STX>RT0242<ETX>
242h: 578d
Result: 578 x 0.0625 = 36.125℃

15. Function Settings (Serial Communication for Camera Function Configuration)

Function	Address: (Dec)	Address: (Hex)	Data:				
Preset Shutter	01	01	Preset Shutter				
				Shutter time Full	Shutter line count		
					Full	Medium	Base & USB3.0
			00:	2056	15.6ms	31.3ms	62.5ms
			01:	2048	15.6ms	31.1ms	62.2ms
			02:	1280	9.7ms	19.5ms	38.9ms
			03:	1024	7.8ms	15.6ms	31.1ms
			04:	640	4.9ms	9.7ms	19.5ms
			05:	512	3.9ms	7.8ms	15.6ms
			06:	256	2.0ms	3.9ms	7.8ms
			07:	128	987us	2.0ms	3.9ms
			08:	64	501us	987us	2.0ms
			09:	32	258us	501us	987us
			0A:	16	136us	258us	501us
			0B:	8	76us	136us	258us
			0C:	4	45us	76us	136us
			0D:	2	30us	45us	76us
			0E:	1	22us	30us	45us
			0F:	Manual Shutter (Address: 38+39d 参照)			
			2x2 binning (4-pixel averaging) mode (Address: 25d, Data: 01d)				
				Shutter line count	Shutter time		
					Full	Medium	Base & USB3.0
			00:	1028	13.6ms	27.1ms	54.2ms
			01:	1024	13.5ms	27.0ms	54.0ms
			02:	768	10.1ms	20.2ms	40.5ms
			03:	512	6.8ms	13.5ms	27.0ms
			04:	384	5.1ms	10.1ms	20.2ms
			05:	256	3.4ms	6.8ms	13.5ms
			06:	192	2.5ms	5.1ms	10.1ms
			07:	128	1.7ms	3.4ms	6.8ms
			08:	64	858us	1.7ms	3.4ms
			09:	32	436us	858us	1.7ms
			0A:	16	226us	436us	858us
			0B:	8	120us	226us	436us
			0C:	4	67us	120us	226us
			0D:	2	41us	67us	120us
			0E:	1	28us	41us	67us
			0F:	Manual Shutter(Address: 38+39d 参照)			

Function	Address: (Dec)	Address: (Hex)	Data:	
Trigger shutter mode	04	04	00:	Live Mode (Trigger OFF)
			01:	**Fixed Shutter Trigger Mode**: The shutter line count can be set using either address: 1d or addresses: 38+39d
			02:	Pulse Width Shutter Trigger Mode
Trigger polarity	05	05	00:	Positive
			01:	Negative
Trigger input	06	06	00:	Camera Link CC1 Input
			01:	12pin Connector 11pin-input
			02:	USB3.0 SDK input
Partial Scan mode ON/OFF	08	08	00:	Full frame
			01:	Partial scan
Camera Link Output mode	10	0A	00:	Full(8Tap) Configuration
			01:	Medium(4Tap) Configuration
			02:	Base(2Tap) Configuration & USB3.0
Out Bit	11	0B	00:	8bit input 8bit input
			01:	10bit input 10bit input
			02:	12bit input 12bit input
Output image vertical inversion ON/OFF	24	18	00:	OFF
			01:	Vertical inversion (ON)
Binning ON/OFF	25	19	00:	Full scan mode
			01:	2x2 Binning (4-pixel Averaging) Mode
Back LED ON/OFF	27	1B	00:	OFF
			01:	ON
Manual Gain	32+33	20+21	LLHH:	min: 0d(0000h) ~ max: 480d(01E0h) 0dB(x1.0) ~ 48dB(x256)
				0d(0000h) 0d(0000h) 60d(003Ch) 60d(003Ch) 480d(01E0h) 480d(01E0h)

Function	Address: (Dec)	Address: (Hex)	Data	
Manual shutter value	38+39	26+27	LLHH:	min: 0d(0000h) ~ max: 65535d(FFFFh) Set the shutter line count. For details please refer to the page '8. Manual Shutter
Setup increment value	52+53	34+35	LLHH:	min: 0d(0000h) ~ max: 511d(01FFh) The sensor outputs 12-bit image data with an added offset value
Partial scan start position	64+65	40+41	LLHH:	min: 0d(0000h) ~ max: 2048d(0800h) 8Line/Step To enable partial scan, set the data: 1d at address: 8d.
Partial scan valid line count	80+81	50+51	LLHH:	min: 8(0008h) ~ max: 2056(0808h) 8Line/Step To enable partial scan, set the data: 1d at address: 8d.

■ **Data set with 1 byte**

Example: Turn off the rear camera LED。

Write data: 0d (00h) to address: 27d (1Bh).

STX SR 1B 00 ETX

Read 1 byte of register information at address: 27d (1Bh).

STX GR 1B ETX

Or、

STX GR 1B 1 ETX

→ STX AR 00 ETX (Response)

■ LLHH: For data set in 2 Bytes, please set it in the order of Low Byte Data and High Byte Data。

Example of setting: To set the partial scan start position to 16 lines,

write data: 16d (0010h) to address: 64+65d (40+41h).

STX	SR	40	10	00	ETX
			(Low)	(Hi)	

Read the register information of address: 64+65d (40+41h) as 2 bytes.

STX SR 40 2 ETX

→ STX AR 10 00 ETX (Response)

16. Dimensions (CHU)

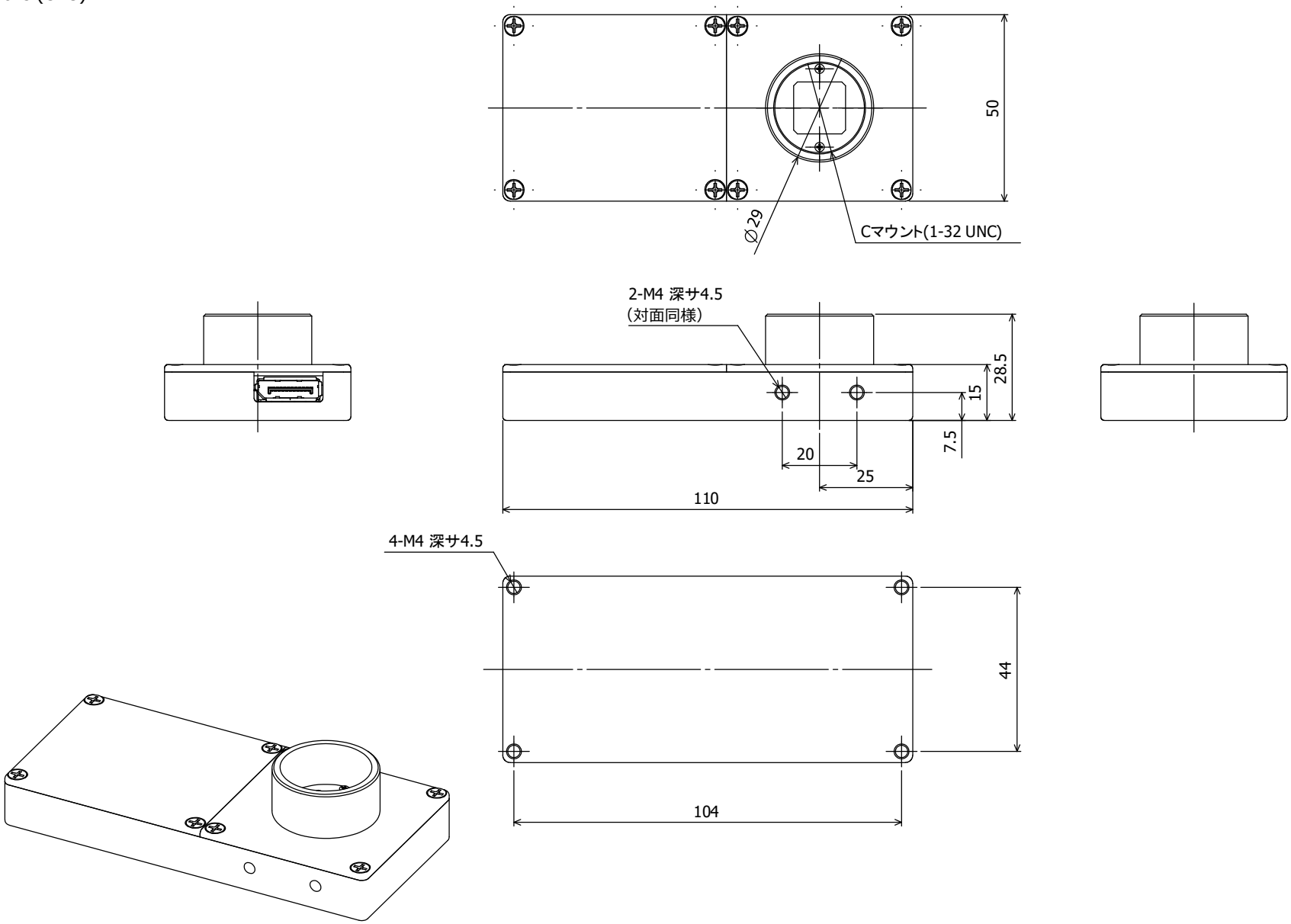

Dimensions (CCU)

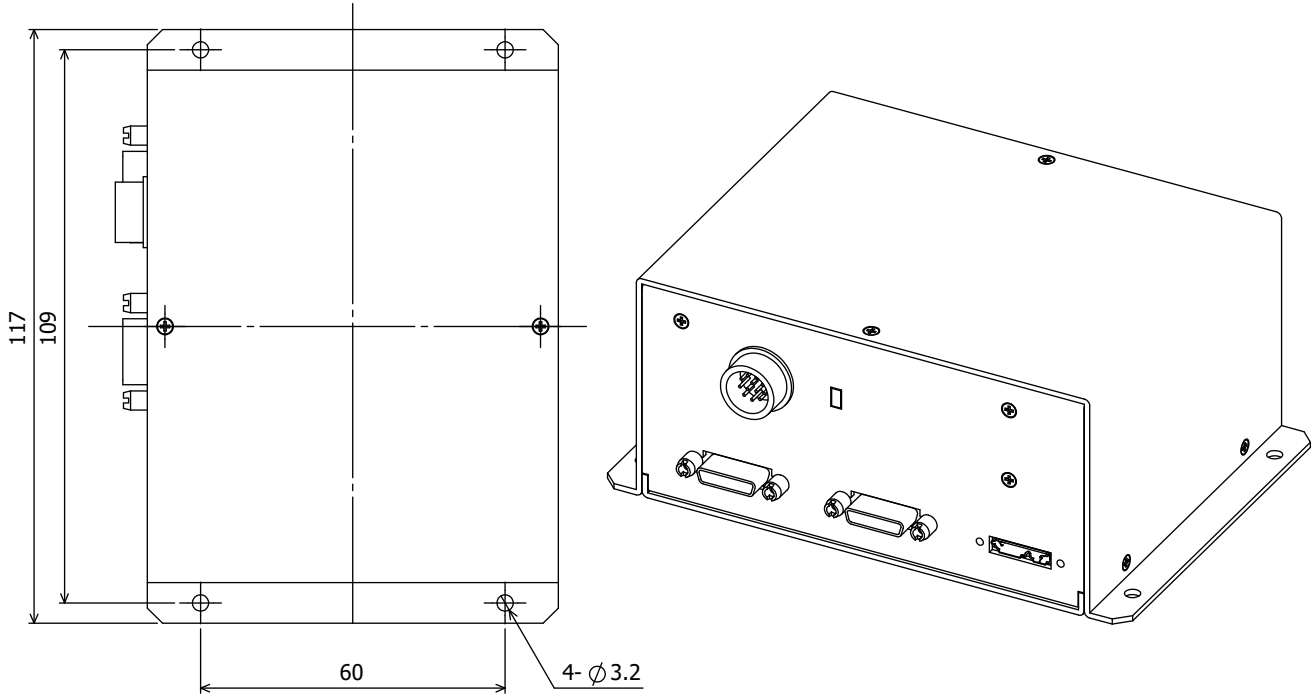

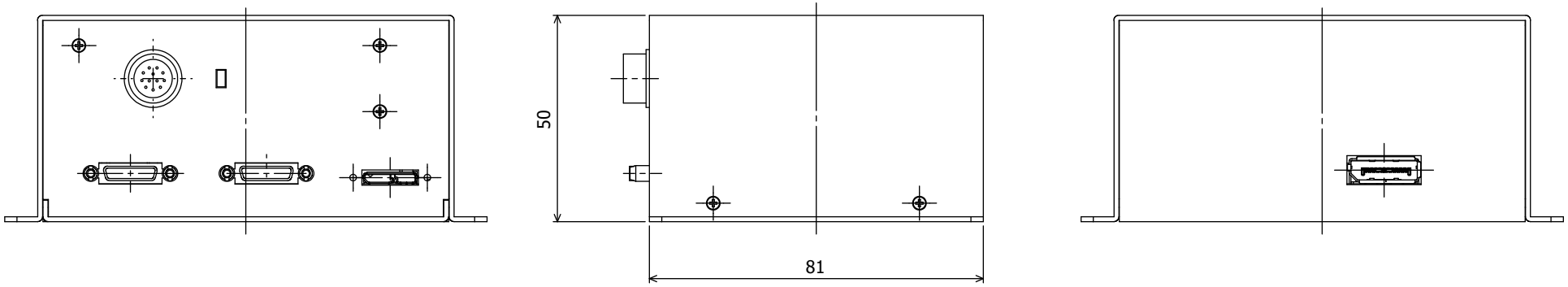

カメラ XY 座標　レンズを装着した状態で画像キャプチャーした際の写真

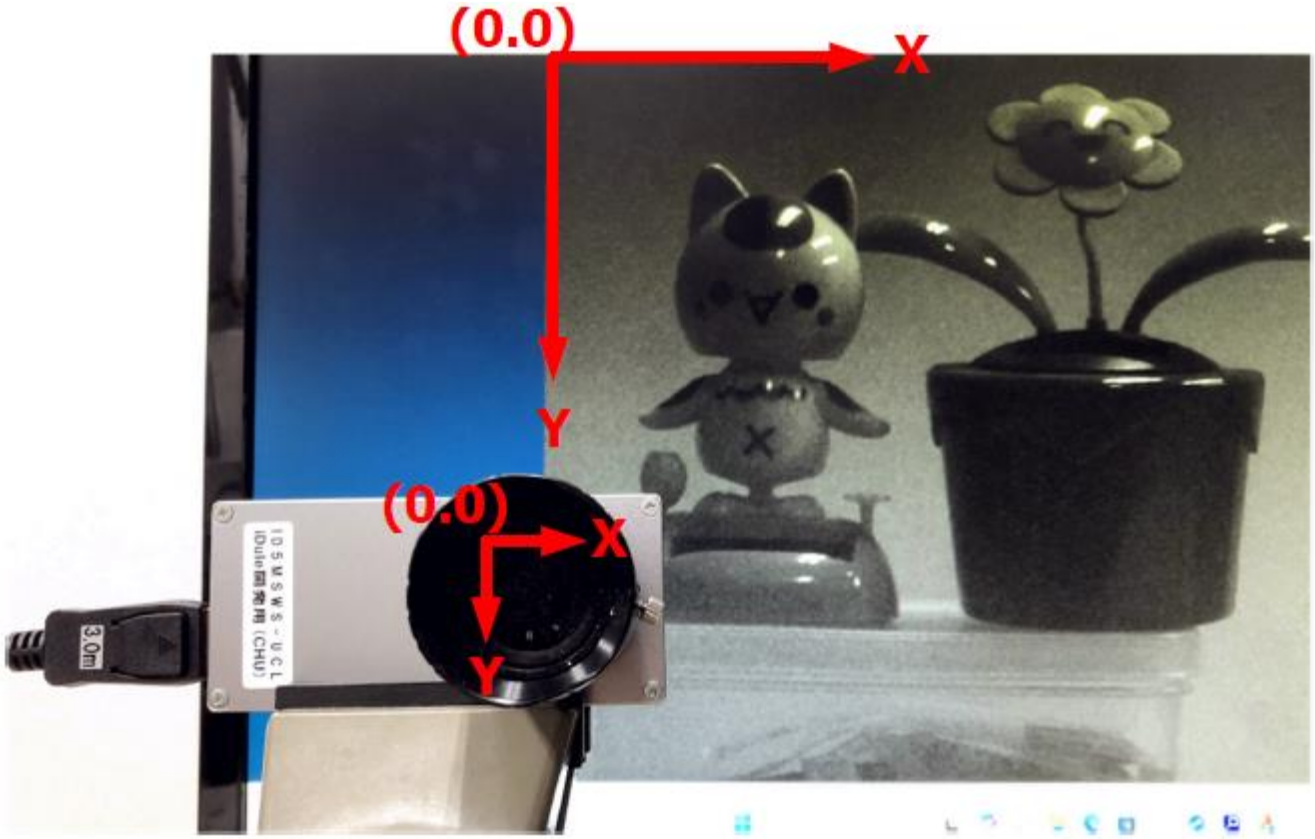

17. Shipping Settings

Function	Address:		Data:	
	(Dec)	(Hex)		
Preset Shutter Table Selection	1	01	00:	Shutter line count:2056, Shutter time: 15.6ms
Trigger Shutter Mode Selection	4	04	00:	Live Mode (Trigger OFF)
Trigger Polarity Selection	5	05	00:	positive polarity
Trigger Input Selection	6	06	00:	Camera Link CC1Input
Partial Scan Mode ON/OFFON/OFF	8	08	00:	Full scan mode
Camera Link Output Mode Selection	10	0A	00:	Full(8Tap) Configuration
Output Bit Selection	11	0B	00:	8bit output
Image Output Vertical Flip ON/OFF	24	18	00:	OFF
Binning mdoeON/OFF	25	19	00:	Full scan mode
Back LED ON/OFF	27	1B	01:	ON
Manual Gain Value	32+33	20+21	0000:	0d(0000h) : 0dB(x1.0)
Manual Shutter Value	38+39	26+27	0808:	2056d(0808h)
Setup Offset Value	52+53	34+35	0000:	0d(0000h)
Partial Scan Start Position	64+65	40+41	0000:	0d(0000h)
Partial Scan Effective Line Count	80+81	50+51	0808:	2056d(0808h)

18. Warranty Coverage

The warranty period for this product is one year from the date of shipment from our company. During this period, if any failure occurs due to design or manufacturing defects, we will repair it free of charge in accordance with the product service policy in Section 20. However, damages or failures caused by mishandling by the customer, or due to force majeure events such as fire, earthquakes, lightning, floods, or other natural disasters, are not covered under the warranty. After the warranty period has expired, repairs will be charged if repairable.

。

19. About CMOS Pixel Defects

Although we correct noticeable pixel defects at the time of product shipment, new pixel defects may occur after shipment due to the inherent characteristics of the imaging sensor. Additionally, the severity of some defects may increase over time. These issues are excluded from the product warranty.

For details regarding pixel defect correction, please contact our sales department.

20. Product Service

If, after purchasing the product, it stops functioning properly due to any reason, please contact the retailer from whom you made the purchase for investigation, analysis, and repair services.